DSP48A1 Project

Digital design using Verilog and FPGA flow using Vivado

Youssef Hossam Elzainy

Table of Contents

1 Project Overview 3
1.1 Description 3
1.2 Key Features 3
1.3 Chip Outer View 4
1.4 Internal Architecture 4
2 RTL Code 5
2.1 DSP48A1 Module 5
2.2 Pipeline stage module 9
2.3 Pre-adder/subtracter module 10
2.4 Post-adder/subtracter module 10
2.5 Mux2_1 module 11
2.6 Mux4_1 module 11
3 Testbench Code 12
4 Do File 16
5 Questasim Waveform 17
6 Testbench Verified 18
7 Constraint file 18
8 Elaboration 21
8.1 Messages tab 21
8.2 Schematic 21
9 Synthesis 22
9.1 Messages tab 22
9.2 Schematic 23
9.3 Utilization report 24
9.4 Timing report 24
10 Implementation 25
10.1 Implementation Device 25
10.2 Utilization report 25
10.3 Timing report 26
11 Lint analysis 26

1 Project Overview

1.1 Description

The purpose of this project is to design and implement a DSP48A1 slice for the Spartan-6 FPGA. The DSP48A1 is a dedicated hardware block optimized for high-speed arithmetic operations, such as multiplication, addition, and accumulation, which are essential in signal processing applications.

In this project, the DSP48A1 design is created using Verilog, and its functionality is verified through a **testbench** that checks different arithmetic paths and reset operations. The design is then synthesized and implemented in Vivado.

This project highlights the use of pipelining, register stages, and cascade connections to improve performance and flexibility. The final deliverables include RTL code, testbench simulation results, constraint files, and reports from synthesis and implementation, demonstrating the complete design flow of a DSP48A1 slice in FPGA.

1.2 Key Features

 High-Speed Arithmetic Operations: Supports fast multiplication, addition, subtraction, and multiply-accumulate (MAC) operations.
 Pipelined Architecture: Includes configurable pipeline stages to improve throughput and timing performance.
 Cascade Capability: Can be connected to other DSP48A1 slices for complex arithmetic chains.
 Flexible Input/Output: Multiple registers and multiplexers allow dynamic routing of inputs and outputs for different operations.
 Reset and Clock Control: Supports synchronous or asynchronous resets with dedicated clock enables for each stage.
 FPGA Integration: Optimized for Spartan-6 FPGAs, making it suitable for high-performance digital signal processing applications.

1.3 Chip Outer View

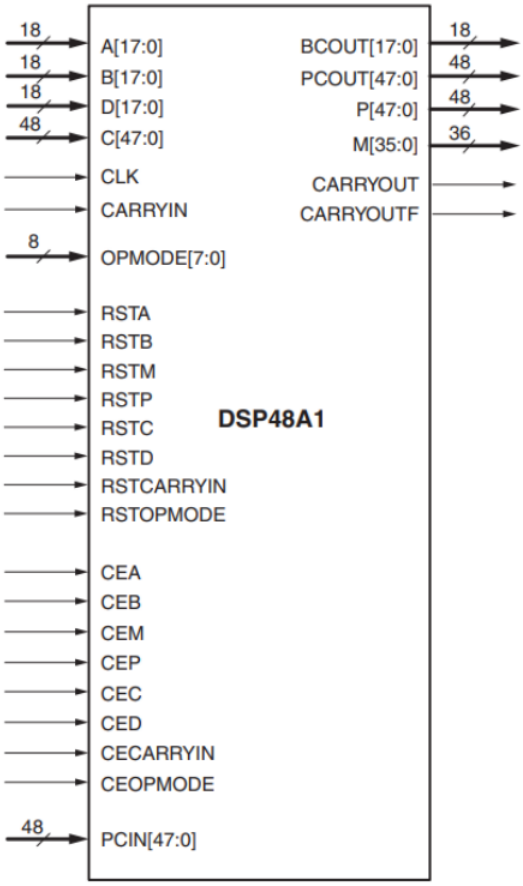

1.4 Internal Architecture

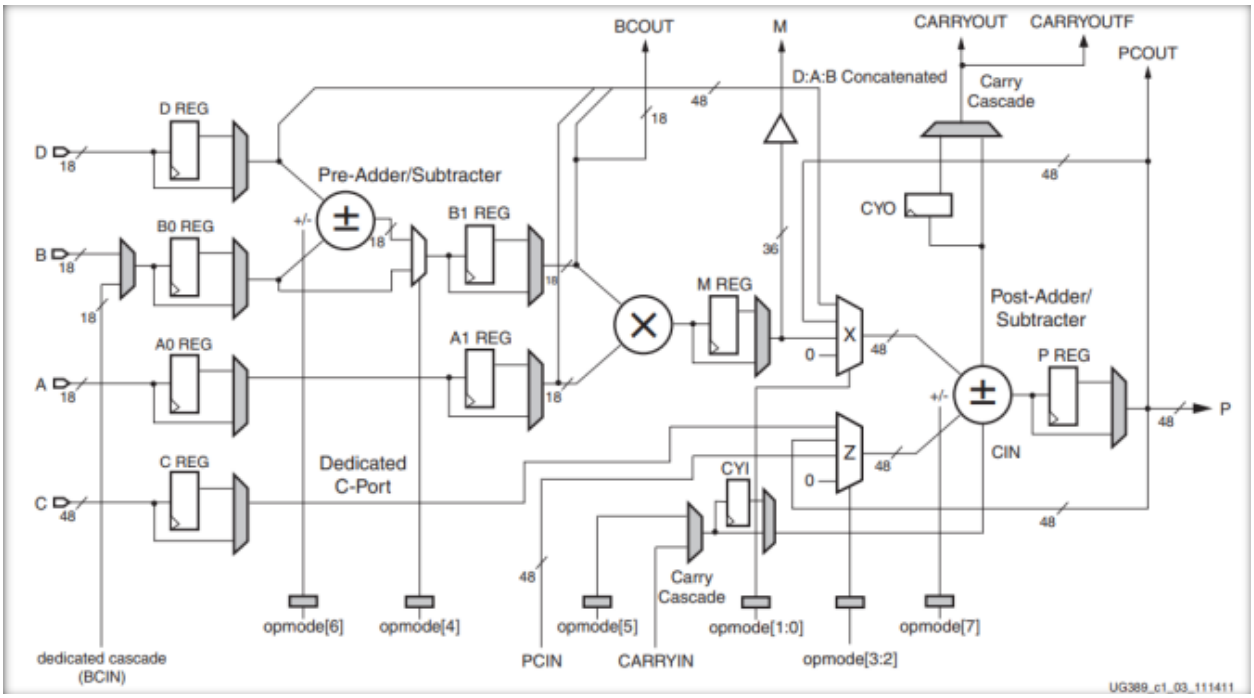

2 RTL Code

2.1 DSP48A1 Module

```
module DSP48A1 #(
    parameter A0REG = 0,
    parameter A1REG = 1,
    parameter B0REG = 0,
    parameter B1REG = 1,
    parameter CREG = 1,
    parameter DREG = 1,
    parameter MREG = 1,
    parameter PREG = 1,
    parameter CARRYINREG = 1,
    parameter CARRYOUTREG = 1,
    parameter OPMODEREG = 1,
    parameter CARRYINSEL = "OPMODE5",
    parameter B_INPUT = "DIRECT",
    parameter RSTTYPE = "SYNC"
) (
    /*---------------------DATA PORTS---------------------*/
    input [17:0] A, B, D,
    input [47:0] C,
    input CARRYIN,
    output [35:0] M,
    output [47:0] P,
    output CARRYOUT,
    output CARRYOUTF,

    /*---------------------CONTROL INPUT PORTS---------------------*/
    input CLK,
    input [7:0] OPMODE,

    /*---------------------CLOCK ENABLE INPUT PORTS---------------------*/
    input CEA, CEB, CEC, CED, CECARRYIN, CEM, CEOPMODE, CEP,

    /*---------------------RESET INPUT PORTS---------------------*/
    input RSTA, RSTB, RSTC, RSTD, RSTCARRYIN, RSTM, RSTOPMODE, RSTP,

    /*---------------------CASCADE PORTS---------------------*/
    output [17:0] BCOUT,
    input [47:0] PCIN,
    output [47:0] PCOUT
);
```

```
/*------------------------- OPMODE PIPELINE -------------------------*/
wire [7:0] OPMODE_OUT;
pipeline_stage #(.WIDTH(8), .RSTTYPE(RSTTYPE)) opmode_stage (
    .in(OPMODE), .clk(CLK), .rst(RSTOPMODE), .clk_en(CEOPMODE), .sel(OPMODEREG),
.out(OPMODE_OUT)
);

/*------------------------- PORT D PIPELINE -------------------------*/
wire [17:0] D1_REG_OUT;
pipeline_stage #(.WIDTH(18), .RSTTYPE(RSTTYPE)) d_stage (
    .in(D), .clk(CLK), .rst(RSTD), .clk_en(CED), .sel(DREG), .out(D1_REG_OUT)
);

/*------------------------- PORT A PIPELINE -------------------------*/
wire [17:0] A0_REG_OUT, A1_REG_OUT;
pipeline_stage #(.WIDTH(18), .RSTTYPE(RSTTYPE)) a0_stage (
    .in(A), .clk(CLK), .rst(RSTA), .clk_en(CEA), .sel(A0REG), .out(A0_REG_OUT)
);
pipeline_stage #(.WIDTH(18), .RSTTYPE(RSTTYPE)) a1_stage (
    .in(A0_REG_OUT), .clk(CLK), .rst(RSTA), .clk_en(CEA), .sel(A1REG), .out(A1_REG_OUT)
);

/*------------------------- PORT B -------------------------*/
wire [17:0] B_mux_in = (B_INPUT == "CASCADE") ? BCOUT : B; // Note: In hardware B_INPUT selects B
or BCIN
wire [17:0] B0_REG_OUT, B1_REG_OUT;

pipeline_stage #(.WIDTH(18), .RSTTYPE(RSTTYPE)) b0_stage (
    .in(B_mux_in), .clk(CLK), .rst(RSTB), .clk_en(CEB), .sel(B0REG), .out(B0_REG_OUT)
);

// Pre-adder logic
wire [17:0] pre_add_sub_out;
pre_adder_subtracer #(.WIDTH(18)) pre_add_sub (
    .in0(D1_REG_OUT), .in1(B0_REG_OUT), .add_sub(OPMODE_OUT[6]), .out(pre_add_sub_out)
);

wire [17:0] mux_after_PreAddSub_out = (OPMODE_OUT[4]) ? pre_add_sub_out : B0_REG_OUT;

pipeline_stage #(.WIDTH(18), .RSTTYPE(RSTTYPE)) b1_stage (
    .in(mux_after_PreAddSub_out), .clk(CLK), .rst(RSTB), .clk_en(CEB), .sel(B1REG), .out(B1_REG_OUT)
);

assign BCOUT = B1_REG_OUT;
```

```
/*------------------------- PORT C PIPELINE -------------------------*/
wire [47:0] C1_REG_OUT;
pipeline_stage #(.WIDTH(48), .RSTTYPE(RSTTYPE)) c_stage (
    .in(C), .clk(CLK), .rst(RSTC), .clk_en(CEC), .sel(CREG), .out(C1_REG_OUT)
);

/*------------------------- MULTIPLIER & M REG -------------------------*/
wire [35:0] multiplier_out = A1_REG_OUT * B1_REG_OUT;
wire [35:0] M_REG_OUT;

pipeline_stage #(.WIDTH(36), .RSTTYPE(RSTTYPE)) m_stage (
    .in(multiplier_out), .clk(CLK), .rst(RSTM), .clk_en(CEM), .sel(MREG), .out(M_REG_OUT)
);
assign M = M_REG_OUT;

/*------------------------- POST-ADDER MUXES (X & Z) -------------------------*/
wire [47:0] X_out, Z_out;

// Mux X: 0:Zero, 1:M, 2:P, 3:Concatenate D:A:B
Mux4_1 MUX_X (
    .in0(48'b0),
    .in1({12'b0, M_REG_OUT}),
    .in2(P),
    .in3({D1_REG_OUT[11:0], A1_REG_OUT, B1_REG_OUT}),
    .sel(OPMODE_OUT[1:0]),
    .out(X_out)
);

// Mux Z: 0:Zero, 1:PCIN, 2:P, 3:C
Mux4_1 MUX_Z (
    .in0(48'b0),
    .in1(PCIN),
    .in2(P),
    .in3(C1_REG_OUT),
    .sel(OPMODE_OUT[3:2]),
    .out(Z_out)
);

/*------------------------- CARRY IN & POST-ADDER -------------------------*/
wire CARRYIN_MUX = (CARRYINSEL == "OPMODE5") ? OPMODE_OUT[5] : CARRYIN;
wire CARRYIN_STAGE;

pipeline_stage #(.WIDTH(1), .RSTTYPE(RSTTYPE)) cin_stage (
    .in(CARRYIN_MUX), .clk(CLK), .rst(RSTCARRYIN), .clk_en(CECARRYIN), .sel(CARRYINREG),
.out(CARRYIN_STAGE)
```

```
);

wire [47:0] post_add_sub_out;
wire post_add_sub_cout;

Post_adder_substracter Post_add_substract(
    .in0(Z_out), .in1(X_out), .cin(CARRYIN_STAGE), .add_sub(OPMODE_OUT[7]),
    .out(post_add_sub_out), .cout(post_add_sub_cout)
);

/*------------------------- OUTPUT PIPELINES (P & CARRYOUT) -------------------------*/
pipeline_stage #(.WIDTH(1), .RSTTYPE(RSTTYPE)) CYO_stage (
    .in(post_add_sub_cout), .clk(CLK), .rst(RSTCARRYIN), .clk_en(CECARRYIN), .sel(CARRYOUTREG),
.out(CARRYOUT)
);
assign CARRYOUTF = CARRYOUT;

pipeline_stage #(.WIDTH(48), .RSTTYPE(RSTTYPE)) PREG_stage (
    .in(post_add_sub_out), .clk(CLK), .rst(RSTP), .clk_en(CEP), .sel(PREG), .out(P)
);

assign PCOUT = P;

endmodule
```

2.2 Pipeline stage module

```
module pipeline_stage #(
    parameter WIDTH = 18, // width of the input and the output
    parameter RSTTYPE = "SYNC" // default reset type is synchronous
) (
    input [WIDTH - 1 : 0] in,
    input clk, // clock signal
    input clk_en, // clock enable
    input sel, // defines the number of pipelining stages
    input rst, // reset
    output [WIDTH - 1 : 0] out
);

reg [WIDTH - 1 : 0] in_r;

// generate block according to the type of the reset (sync - async)
generate
    // synchronous reset
    if (RSTTYPE == "SYNC") begin
        always @(posedge clk) begin
            if (rst) begin
                in_r <= 0;
            end
            else begin
                if(clk_en)
                    in_r <= in;
            end
        end
    end
    // asynchronous reset
    else if (RSTTYPE == "ASYNC") begin
        always @(posedge clk or posedge rst) begin
            if (rst) begin
                in_r <= 0;
            end
            else begin
                if(clk_en)
                    in_r <= in;
            end
        end
    end
endgenerate

    assign out = (sel)? in_r : in;
```

```
    /*
        if the sel == 1 -> then there are pipeline stage -> out = in_r
        if the sel == 0 -> no pipeline stage -> out = in directly
    */
endmodule
```

2.3 Pre-adder/subtracter module

```
module pre_adder_subtracer #(
    parameter WIDTH = 18
) (
    input [WIDTH - 1 : 0] in0,
    input [WIDTH - 1 : 0] in1,
    input add_sub,
    output reg [WIDTH - 1 : 0] out
);

always @(*) begin
    if (~add_sub) begin
        out = in0 + in1;
    end
    else begin
        out = in0 - in1;
    end
end
endmodule
```

2.4 Post-adder/subtracter module

```
module Post_adder_substracter (in0,in1,cin,add_sub,out,cout);
    input [47:0]in0,in1;
    input add_sub,cin;
    output reg [47:0]out;
    output reg cout;
    always @(*) begin

        if(~add_sub)
            {cout,out} = in0 +(in1+cin);

        else
            {cout,out} = in0 -(in1+cin);
    End
Endmodule
```

2.5 Mux2_1 module

```
module Mux2_1 #(
    parameter WIDTH = 18
) (
    input [WIDTH - 1 : 0] in0,
    input [WIDTH - 1 : 0] in1,
    input sel,
    output [WIDTH - 1 : 0 ] out
);

assign out = (sel)? in0 : in1;

endmodule
```

2.6 Mux4_1 module

```
module Mux4_1 (
    input [47:0] in0,
    input [47:0] in1,
    input [47:0] in2,
    input [47:0] in3,
    input [1:0] sel,
    output reg [47:0] out
);
    always @(*) begin
    case (sel)
        2'b00: out=in0;
        2'b01: out=in1;
        2'b10: out=in2;
        2'b11: out=in3;
    endcase
end
endmodule
```

3 Testbench Code

```
`timescale 1ns / 1ps

module DSP48A1_tb ;

reg [17:0] A,B,D,BCIN;
reg [47:0] C,PCIN;
reg [7:0] OPMODE;
reg CLK,CARRYIN;
reg RSTA,RSTB,RSTM,RSTP,RSTC,RSTD,RSTCARRYIN,RSTOPMODE,
CEA,CEB,CEM,CEP,CEC,CED,CECARRYIN,CEOPMODE;

wire [17:0] BCOUT;
wire [47:0] PCOUT,P;
wire [35:0] M ;
wire CARRYOUT ,CARRYOUTF;

DSP48A1 DUT (
        .A(A), .B(B), .C(C), .D(D),
        .CARRYIN(CARRYIN),
        .M(M), .P(P), .PCOUT(PCOUT),
        .CARRYOUT(CARRYOUT), .CARRYOUTF(CARRYOUTF),
        .BCOUT(BCOUT),
        .CLK(CLK), .OPMODE(OPMODE),
        .CEA(CEA), .CEB(CEB), .CEC(CEC), .CED(CED),
        .CECARRYIN(CECARRYIN), .CEM(CEM), .CEOPMODE(CEOPMODE), .CEP(CEP),
        .RSTA(RSTA), .RSTB(RSTB), .RSTC(RSTC), .RSTD(RSTD),
        .RSTM(RSTM), .RSTOPMODE(RSTOPMODE), .RSTP(RSTP), .RSTCARRYIN(RSTCARRYIN),
        .PCIN(PCIN)
    );

integer i;
reg [47:0] past_P;
reg past_CARRYOUT;

initial begin
    CLK = 0;
    forever #5 CLK = ~CLK;
end

task rst_check;
    begin
        RSTA = 1; RSTB = 1; RSTC = 1; RSTCARRYIN = 1;
```

```
        RSTD = 1; RSTM = 1; RSTOPMODE = 1; RSTP = 1;

        A = $random;
        B = $random;
        D = $random;
        BCIN = $random;
        C = {$random, $random};
        PCIN = {$random, $random};
        CARRYIN = $random;
        OPMODE = $random;

        @(posedge CLK);
        @(negedge CLK);

        if (P == 0 && M == 0 && BCOUT == 0 && PCOUT == 0 && CARRYOUT == 0 && CARRYOUTF
== 0) begin
            $display("Time: %0t | SUCCESS: Reset Operation Verified.", $time);
        end else begin
            $display("Time: %0t | ERROR: Reset Operation Failed.", $time);
        end

        RSTA = 0; RSTB = 0; RSTC = 0; RSTCARRYIN = 0;
        RSTD = 0; RSTM = 0; RSTOPMODE = 0; RSTP = 0;

        CEA = 1; CEB = 1; CEC = 1; CECARRYIN = 1;
        CED = 1; CEM = 1; CEOPMODE = 1; CEP = 1;

        @(negedge CLK);
    end
endtask

task Path1_check;
    begin
        A = 20;
        B = 10;
        D = 25;
        BCIN = $random;
        C = 350;
        PCIN = {$random, $random};
        CARRYIN = $random;
        OPMODE = 8'b11011101;

        @(posedge CLK);
        for ( i = 0; i<4 ;i=i+1 ) begin
            @(negedge CLK);
```

```
        end


        if (P == 'h32 && PCOUT == 'h32 && M == 'h12c && BCOUT == 'hf && CARRYOUT == 0 &&
CARRYOUTF == 0) begin
            $display("Time: %0t | SUCCESS: Path 1 Verified.", $time);
        end else begin
            $display("Time: %0t | ERROR: Path 1 Failed.", $time);
        end
        @(negedge CLK);
    end
endtask

task Path2_check;
    begin
        A = 20;
        B = 10;
        D = 25;
        BCIN = $random;
        C = 350;
        PCIN = {$random, $random};
        CARRYIN = $random;
        OPMODE = 8'b00010000;

        @(posedge CLK);
        for ( i = 0; i<3 ;i=i+1 ) begin
            @(negedge CLK);
        end

        if (P == 0 && PCOUT == 0 && M == 'h2bc && BCOUT == 'h23 && CARRYOUT == 0 &&
CARRYOUTF == 0) begin
            $display("Time: %0t | SUCCESS: Path 2 Verified.", $time);
        end else begin
            $display("Time: %0t | ERROR: Path 2 Failed.", $time);
        end
        @(negedge CLK);
    end
endtask

task Path3_check;
    begin
        A = 20;
        B = 10;
        D = 25;
        BCIN = $random;
```

```
        C = 350;
        PCIN = {$random, $random};
        CARRYIN = $random;
        OPMODE = 8'b00001010;

        past_P = P;
        past_CARRYOUT = CARRYOUT;

        @(posedge CLK);
        for ( i = 0; i<3 ;i=i+1 ) begin
            @(negedge CLK);
        end

        // FIXED: Check current P against the saved past_P
        if (P == past_P && PCOUT == past_P && M == 'hc8 && BCOUT == 'ha && CARRYOUT ==
past_CARRYOUT && CARRYOUTF == past_CARRYOUT ) begin
            $display("Time: %0t | SUCCESS: Path 3 Verified.", $time);
        end else begin
            $display("Time: %0t | ERROR: Path 3 Failed.", $time);
        end
        @(negedge CLK);
    end
endtask

task Path4_check;
    begin
        A = 5;
        B = 6;
        D = 25;
        BCIN = $random;
        C = 350;
        PCIN = 3000;
        CARRYIN = $random;
        OPMODE = 8'b10100111;

        @(posedge CLK);
        for ( i = 0; i<3 ;i=i+1 ) begin
            @(negedge CLK);
        end

        if (P == 'hfe6fffec0bb1 && PCOUT == 'hfe6fffec0bb1 && M == 'h1e && BCOUT == 'h6 &&
CARRYOUT == 1 && CARRYOUTF == 1 ) begin
            $display("Time: %0t | SUCCESS: Path 4 Verified.", $time);
        end else begin
            $display("Time: %0t | ERROR: Path 4 Failed.", $time);
```

```
        end
        @(negedge CLK);
    end
endtask

initial begin
    rst_check();
    Path1_check();
    Path2_check();
    Path3_check();
    Path4_check();

end

endmodule
```

4 Do File

D: > digital_design_verilog > DSP48A1_project > DSP48A1.do

```
vlib work
vlog DSP48A1.v DSP48A1_tb.v mux2To1.v mux4To1.v pipeline_stage.v pre_adder_subtracter.v post_adder_subtracter
vsim -voptargs=+acc work.DSP48A1_tb
add wave *
run -all
#quit -sim
```

5 Questasim Waveform

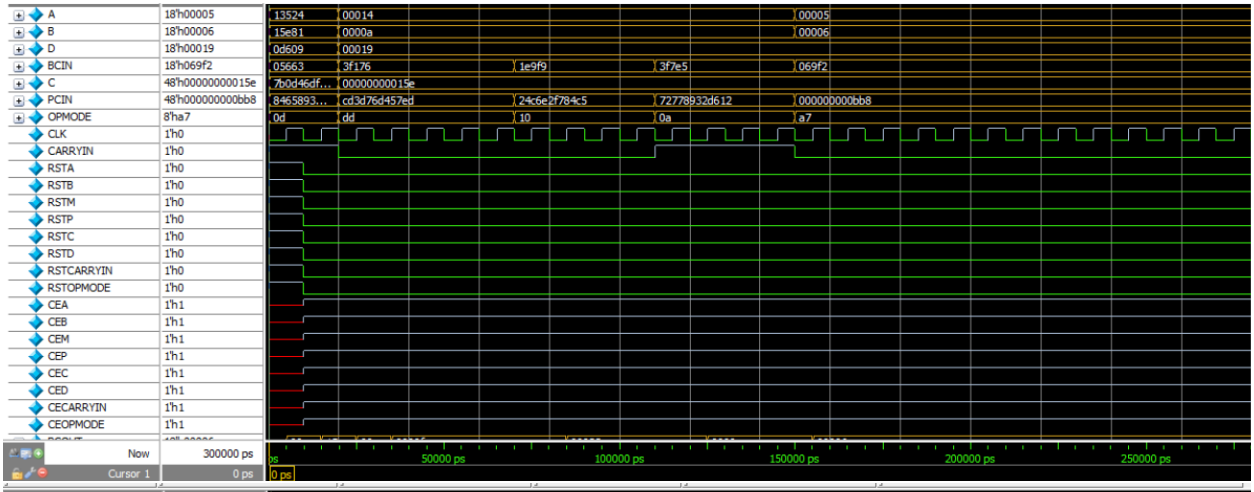

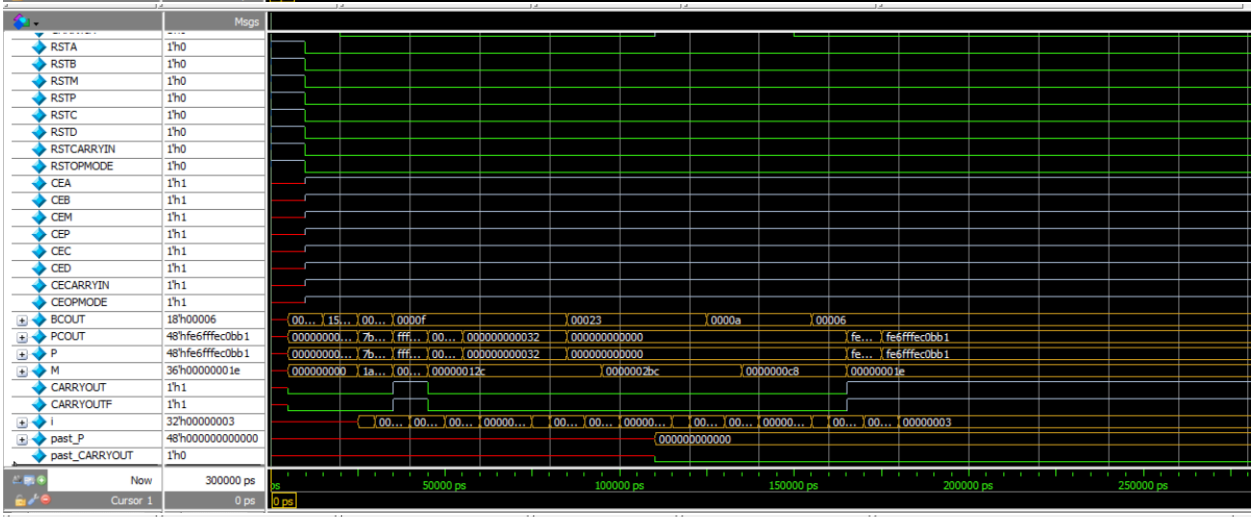

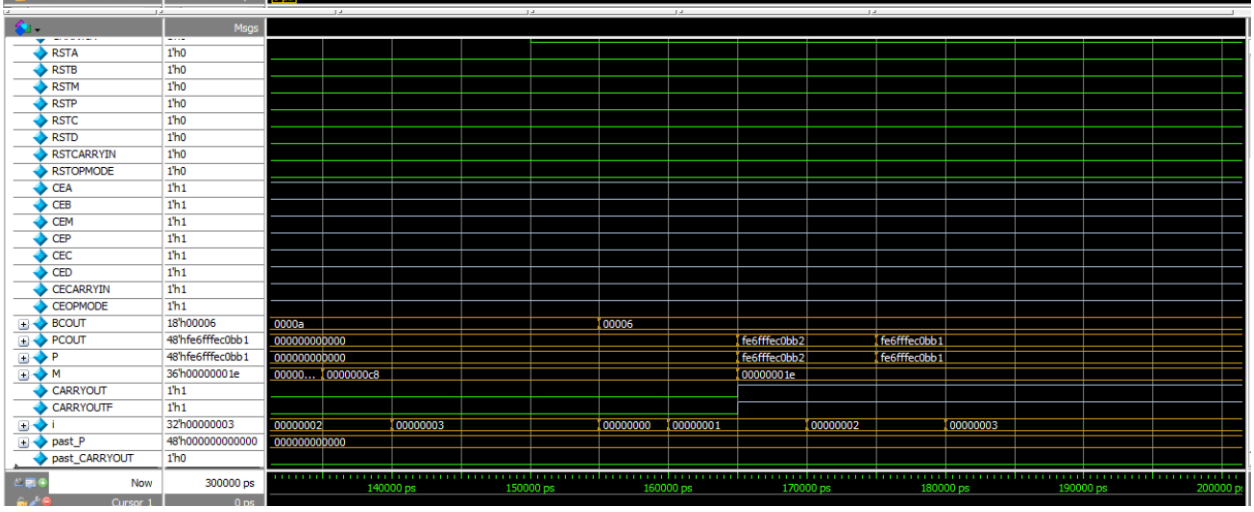

6 Testbench Verified

```
VSIM 6> run
# Time: 10000 | SUCCESS: Reset Operation Verified.
# Time: 60000 | SUCCESS: Path 1 Verified.
# Time: 100000 | SUCCESS: Path 2 Verified.
run
# Time: 140000 | SUCCESS: Path 3 Verified.
# Time: 180000 | SUCCESS: Path 4 Verified.
VSIM 7> run
```

7 Constraint file

```
# ================================
# DSP48A1 Constraint File for xc7a200tffg1156-3
# Clock frequency: 100 MHz
# ================================

# Clock constraint
create_clock -period 10.0 [get_ports clk]
set_property PACKAGE_PIN W5 [get_ports clk]
set_property IOSTANDARD LVCMOS33 [get_ports clk]

# Reset signals (active high)
set_property PACKAGE_PIN <pin_RSTA> [get_ports RSTA]
set_property IOSTANDARD LVCMOS33 [get_ports RSTA]

set_property PACKAGE_PIN <pin_RSTB> [get_ports RSTB]
set_property IOSTANDARD LVCMOS33 [get_ports RSTB]

set_property PACKAGE_PIN <pin_RSTC> [get_ports RSTC]
set_property IOSTANDARD LVCMOS33 [get_ports RSTC]

set_property PACKAGE_PIN <pin_RSTCARRYIN> [get_ports RSTCARRYIN]
set_property IOSTANDARD LVCMOS33 [get_ports RSTCARRYIN]

set_property PACKAGE_PIN <pin_RSTD> [get_ports RSTD]
set_property IOSTANDARD LVCMOS33 [get_ports RSTD]

set_property PACKAGE_PIN <pin_RSTM> [get_ports RSTM]
set_property IOSTANDARD LVCMOS33 [get_ports RSTM]
```

```
set_property PACKAGE_PIN <pin_RSTOPMODE> [get_ports RSTOPMODE]
set_property IOSTANDARD LVCMOS33 [get_ports RSTOPMODE]

set_property PACKAGE_PIN <pin_RSTP> [get_ports RSTP]
set_property IOSTANDARD LVCMOS33 [get_ports RSTP]

# Clock enable signals
set_property PACKAGE_PIN <pin_CEA> [get_ports CEA]
set_property IOSTANDARD LVCMOS33 [get_ports CEA]

set_property PACKAGE_PIN <pin_CEB> [get_ports CEB]
set_property IOSTANDARD LVCMOS33 [get_ports CEB]

set_property PACKAGE_PIN <pin_CEC> [get_ports CEC]
set_property IOSTANDARD LVCMOS33 [get_ports CEC]

set_property PACKAGE_PIN <pin_CECARRYIN> [get_ports CECARRYIN]
set_property IOSTANDARD LVCMOS33 [get_ports CECARRYIN]

set_property PACKAGE_PIN <pin_CED> [get_ports CED]
set_property IOSTANDARD LVCMOS33 [get_ports CED]

set_property PACKAGE_PIN <pin_CEM> [get_ports CEM]
set_property IOSTANDARD LVCMOS33 [get_ports CEM]

set_property PACKAGE_PIN <pin_CEOPMODE> [get_ports CEOPMODE]
set_property IOSTANDARD LVCMOS33 [get_ports CEOPMODE]

set_property PACKAGE_PIN <pin_CEP> [get_ports CEP]
set_property IOSTANDARD LVCMOS33 [get_ports CEP]

# DSP Inputs
# A[17:0]
set_property PACKAGE_PIN <pin_A0> [get_ports {A[0]}]
set_property PACKAGE_PIN <pin_A1> [get_ports {A[1]}]
# Repeat for A[2] to A[17]

# B[17:0]
set_property PACKAGE_PIN <pin_B0> [get_ports {B[0]}]
set_property PACKAGE_PIN <pin_B1> [get_ports {B[1]}]
# Repeat for B[2] to B[17]

# C[47:0]
set_property PACKAGE_PIN <pin_C0> [get_ports {C[0]}]
```

```
# Repeat for C[1] to C[47]

# D[17:0]
set_property PACKAGE_PIN <pin_D0> [get_ports {D[0]}]
# Repeat for D[1] to D[17]

# Control & Cascade ports
set_property PACKAGE_PIN <pin_OPMODE> [get_ports OPMODE]
set_property IOSTANDARD LVCMOS33 [get_ports OPMODE]

set_property PACKAGE_PIN <pin_CARRYIN> [get_ports CARRYIN]
set_property IOSTANDARD LVCMOS33 [get_ports CARRYIN]

set_property PACKAGE_PIN <pin_BCIN> [get_ports BCIN]
set_property IOSTANDARD LVCMOS33 [get_ports BCIN]

set_property PACKAGE_PIN <pin_PCIN> [get_ports PCIN]
set_property IOSTANDARD LVCMOS33 [get_ports PCIN]

# DSP Outputs
# M[35:0]
set_property PACKAGE_PIN <pin_M0> [get_ports {M[0]}]
# Repeat for M[1] to M[35]

# P[47:0]
set_property PACKAGE_PIN <pin_P0> [get_ports {P[0]}]
# Repeat for P[1] to P[47]

set_property PACKAGE_PIN <pin_CARRYOUT> [get_ports CARRYOUT]
set_property IOSTANDARD LVCMOS33 [get_ports CARRYOUT]

set_property PACKAGE_PIN <pin_CARRYOUTF> [get_ports CARRYOUTF]
set_property IOSTANDARD LVCMOS33 [get_ports CARRYOUTF]

set_property PACKAGE_PIN <pin_BCOUT> [get_ports BCOUT]
set_property IOSTANDARD LVCMOS33 [get_ports BCOUT]

set_property PACKAGE_PIN <pin_PCOUT> [get_ports PCOUT]
set_property IOSTANDARD LVCMOS33 [get_ports PC
```

8 Elaboration

8.1 Messages tab

- Elaborated Design (2 warnings)
  - General Messages (2 warnings)
    - [Synth 8-2490] overwriting previous definition of module DSP48A1 [DSP48A1.v:1]
    - [Synth 8-3331] design DSP48A1 has unconnected port CARRYIN
- Synthesis (22 warnings)
  - [Synth 8-2490] overwriting previous definition of module DSP48A1 [DSP48A1.v:1]
  - [Synth 8-3331] design DSP48A1 has unconnected port CARRYIN (1 more like this)
  - [Synth 8-3332] Sequential element (B0REG_stage/in_r_reg[17]) is unused and will be removed from module DSP48A1. (17 more like this)
  - [Constraints 18-5210] No constraint will be written out.

8.2 Schematic

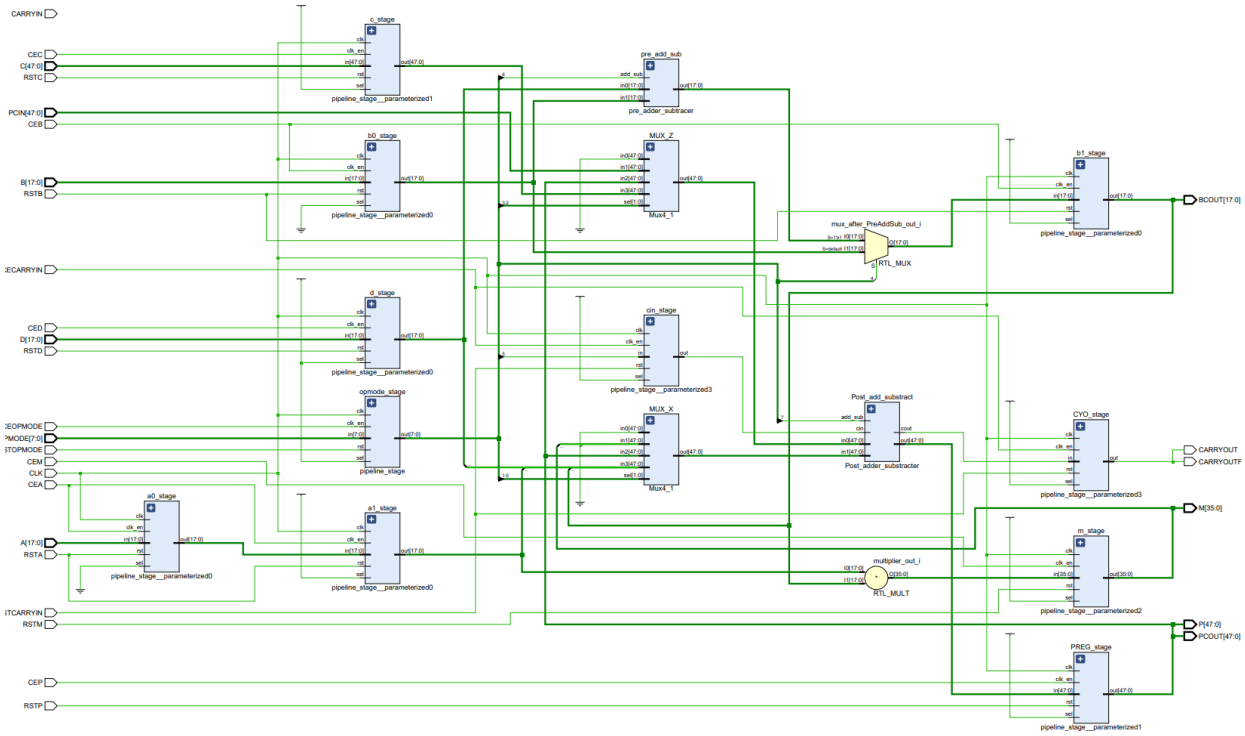

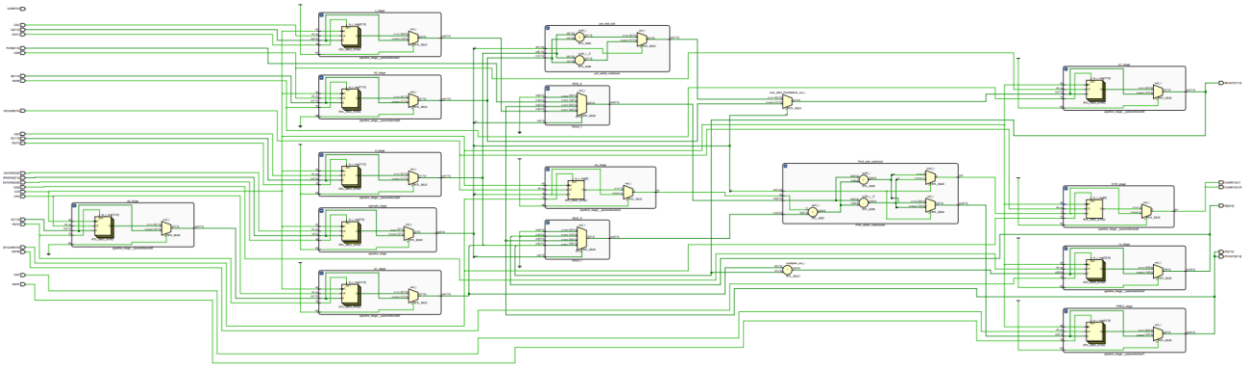

9 Synthesis

9.1 Messages tab

Synthesized Design (7 infos)

General Messages (7 infos)

- [Netlist 29-17] Analyzing 220 Unisim elements for replacement
- [Netlist 29-28] Unisim Transformation completed in 0 CPU seconds
- [Project 1-479] Netlist was created with Vivado 2018.2
- [Device 21-403] Loading part xc7a200tffg1156-3
- [Project 1-570] Preparing netlist for logic optimization
- [Opt 31-138] Pushed 0 inverter(s) to 0 load pin(s).
- [Project 1-111] Unisim Transformation Summary:
  No Unisim elements were transformed.

9.2 Schematic

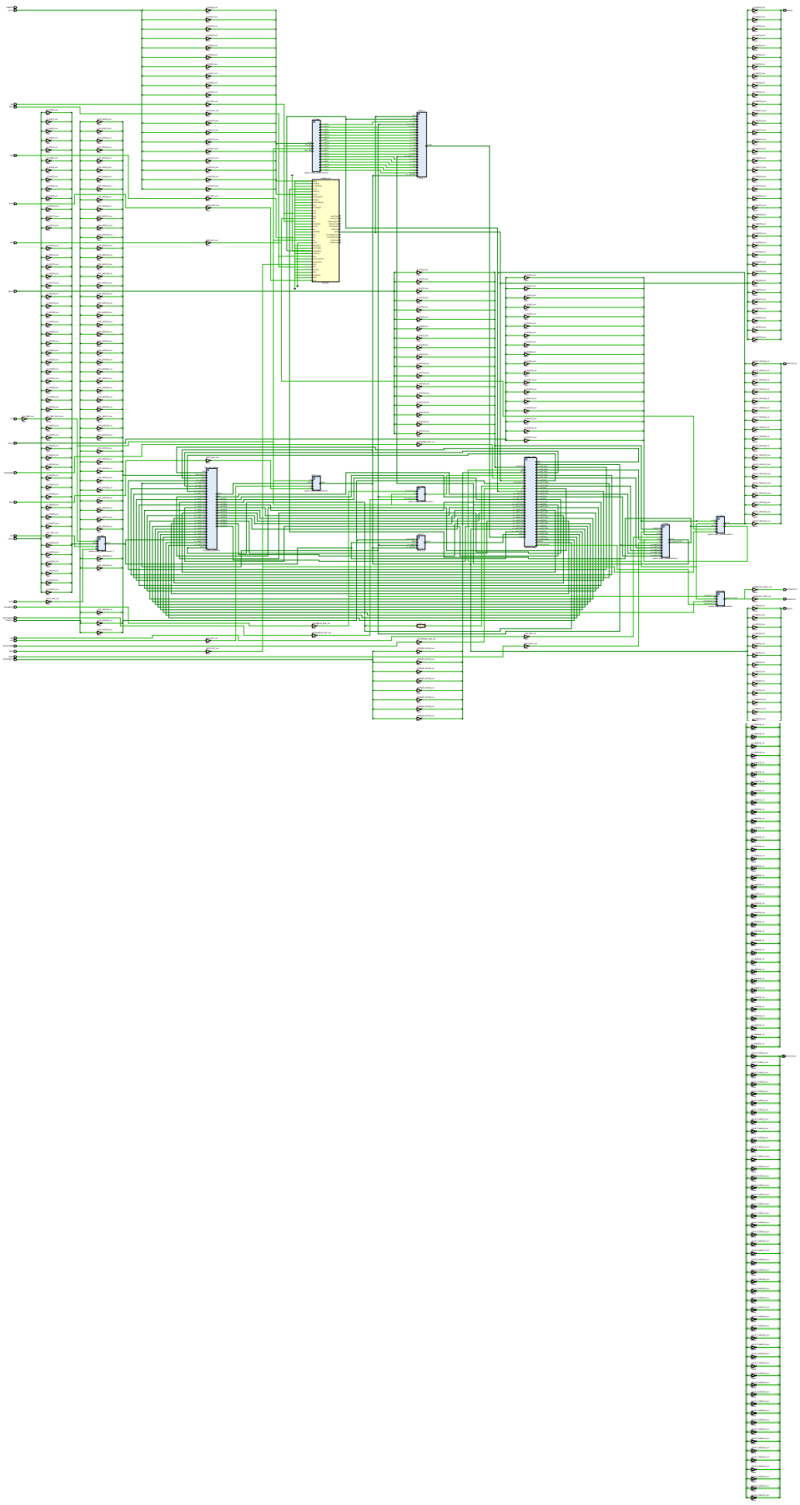

9.3 Utilization report

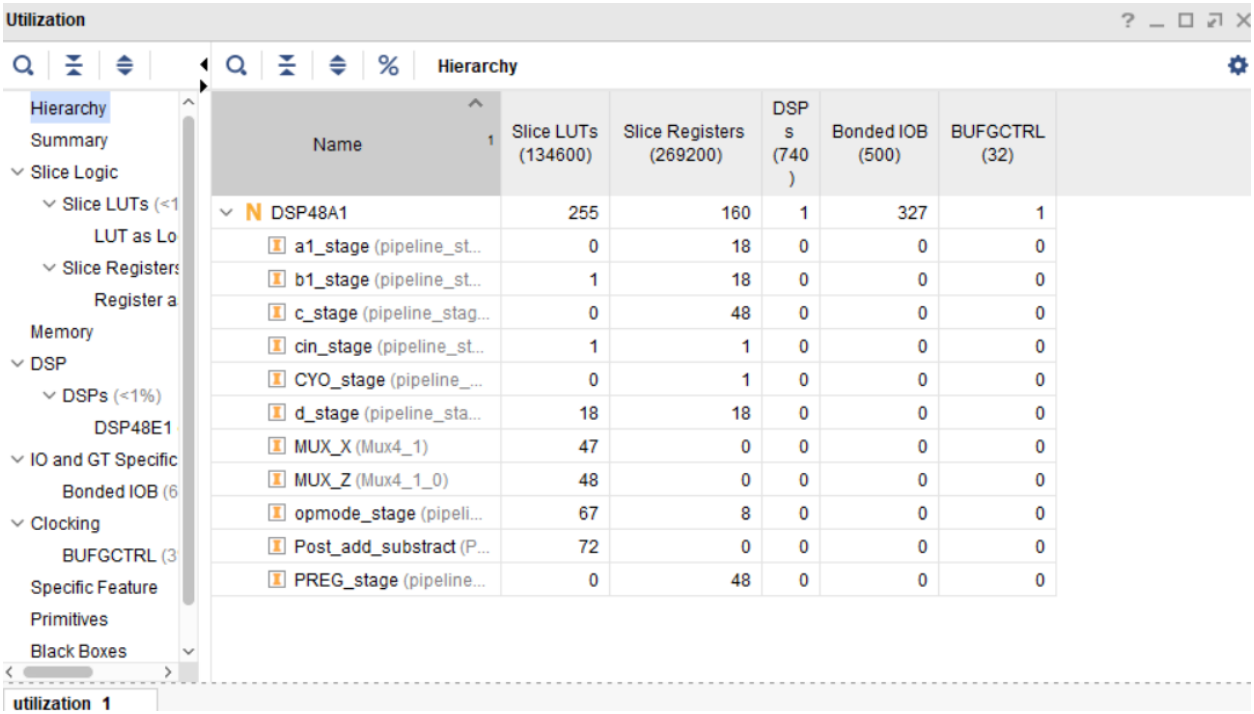

Name	Slice LUTs (134600)	Slice Registers (269200)	DSPs (740)	Bonded IOB (500)	BUFGCTRL (32)
DSP48A1	255	160	1	327	1
a1_stage (pipeline_st...	0	18	0	0	0
b1_stage (pipeline_st...	1	18	0	0	0
c_stage (pipeline_stag...	0	48	0	0	0
cin_stage (pipeline_st...	1	1	0	0	0
CYO_stage (pipeline_...	0	1	0	0	0
d_stage (pipeline_sta...	18	18	0	0	0
MUX_X (Mux4_1)	47	0	0	0	0
MUX_Z (Mux4_1_0)	48	0	0	0	0
opmode_stage (pipeli...	67	8	0	0	0
Post_add_substract (P...	72	0	0	0	0
PREG_stage (pipeline...	0	48	0	0	0

9.4 Timing report

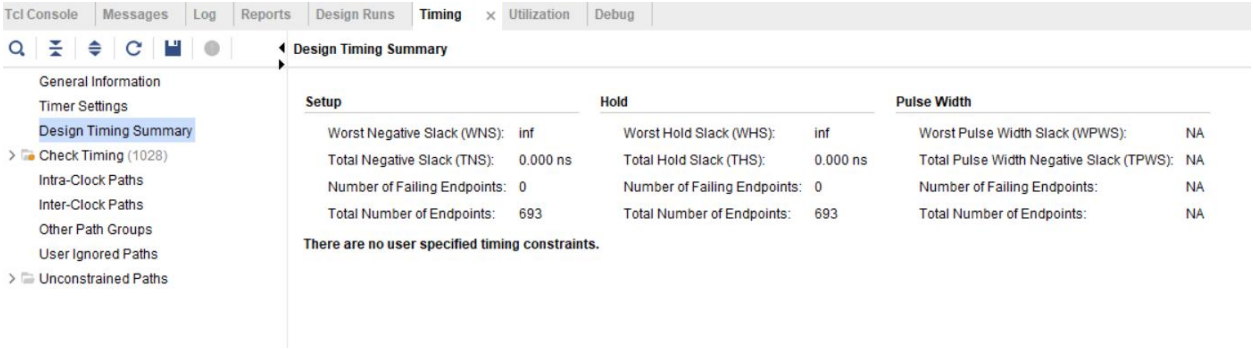

10 Implementation

10.1 Implementation Device

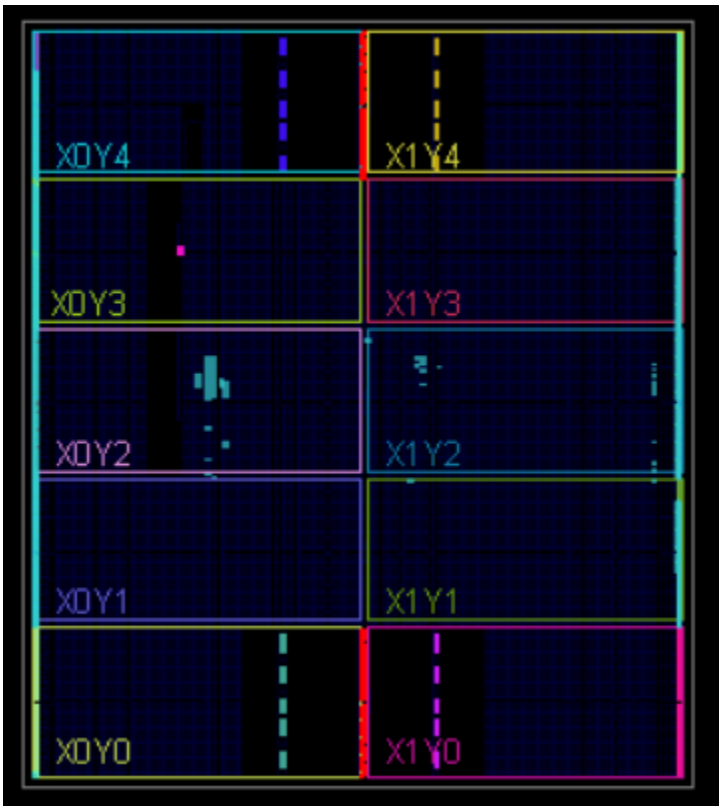

10.2 Utilization report

Name	Slice LUTs (133800)	Slice Registers (267600)	Slice (33450)	LUT as Logic (133800)	LUT Flip Flop Pairs (133800)	DSPs (740)	Bonded IOB (500)	BUFGCTRL (32)
DSP48A1	254	179	115	254	25	1	327	1
a1_stage (pipeline_st...	0	18	3	0	0	0	0	0
b1_stage (pipeline_st...	0	36	11	0	0	0	0	0
c_stage (pipeline_stag...	0	48	18	0	0	0	0	0
cin_stage (pipeline_st...	1	1	1	1	1	0	0	0
CYO_stage (pipeline_...	0	2	1	0	0	0	0	0
d_stage (pipeline_sta...	18	18	15	18	0	0	0	0
MUX_X (Mux4_1)	47	0	12	47	0	0	0	0
MUX_Z (Mux4_1_0)	48	0	23	48	0	0	0	0
opmode_stage (pipeli...	67	8	49	67	0	0	0	0
Post_add_substract (P...	72	0	24	72	0	0	0	0
PREG_stage (pipeline...	0	48	12	0	0	0	0	0

10.3 Timing report

Name	Slice LUTs (133800)	Slice Registers (267600)	Slice (33450)	LUT as Logic (133800)	LUT Flip Flop Pairs (133800)	DSPs (740)	Bonded IOB (500)	BUFGCTRL (32)
DSP48A1	254	179	115	254	25	1	327	1
a1_stage (pipeline_st...	0	18	3	0	0	0	0	0
b1_stage (pipeline_st...	0	36	11	0	0	0	0	0
c_stage (pipeline_stag...	0	48	18	0	0	0	0	0
cin_stage (pipeline_st...	1	1	1	1	1	0	0	0
CYO_stage (pipeline_...	0	2	1	0	0	0	0	0
d_stage (pipeline_sta...	18	18	15	18	0	0	0	0
MUX_X (Mux4_1)	47	0	12	47	0	0	0	0
MUX_Z (Mux4_1_0)	48	0	23	48	0	0	0	0
opmode_stage (pipeli...	67	8	49	67	0	0	0	0
Post_add_substract (P...	72	0	24	72	0	0	0	0
PREG_stage (pipeline...	0	48	12	0	0	0	0	0

11 Lint analysis

Lint Checks

Lint Checks

Filter: Type here | Waived | Fixed | Pending | Uninspected | Bug | Verified | Total : 22 Selected : 0

Severity	Status	Check	Alias	Message	Module	Category	State	Owner	
		unresolved_module		Module is instantiated but not defined. Module pipelin...	pipeline_stage	Rtl Design Style	open	unassig...	
		unresolved_module		Module is instantiated but not defined. Module pre_ad...	pre_adder_su...	Rtl Design Style	open	unassig...	
		unresolved_module		Module is instantiated but not defined. Module Mux4_...	Mux4_1	Rtl Design Style	open	unassig...	
		unresolved_module		Module is instantiated but not defined. Module Post_a...	Post_adder_s...	Rtl Design Style	open	unassig...	
		condition_const		Condition expression is a constant. Module DSP48A1,...	DSP48A1	Rtl Design Style	open	unassig...	
		condition_const		Condition expression is a constant. Module DSP48A1,...	DSP48A1	Rtl Design Style	open	unassig...	
		module_has_blackbox_in...		Module has blackbox instance. Instance opmode_sta...	DSP48A1	Connectivity	open	unassig...	
		module_has_blackbox_in...		Module has blackbox instance. Instance d_stage, Bla...	DSP48A1	Connectivity	open	unassig...	
		module_has_blackbox_in...		Module has blackbox instance. Instance a0_stage, Bl...	DSP48A1	Connectivity	open	unassig...	
		module_has_blackbox_in...		Module has blackbox instance. Instance a1_stage, Bl...	DSP48A1	Connectivity	open	unassig...	
		module_has_blackbox_in...		Module has blackbox instance. Instance b0_stage, Bl...	DSP48A1	Connectivity	open	unassig...	
		module_has_blackbox_in...		Module has blackbox instance. Instance pre_add_sub...	DSP48A1	Connectivity	open	unassig...	
		module_has_blackbox_in...		Module has blackbox instance. Instance b1_stage, Bl...	DSP48A1	Connectivity	open	unassig...	
		module_has_blackbox_in...		Module has blackbox instance. Instance c_stage, Bla...	DSP48A1	Connectivity	open	unassig...	
		module_has_blackbox_in...		Module has blackbox instance. Instance m_stage, Bla...	DSP48A1	Connectivity	open	unassig...	
		module_has_blackbox_in...		Module has blackbox instance. Instance MUX_X, Blac...	DSP48A1	Connectivity	open	unassig...	
		module_has_blackbox_in...		Module has blackbox instance. Instance MUX_Z, Blac...	DSP48A1	Connectivity	open	unassig...	
		module_has_blackbox_in...		Module has blackbox instance. Instance cin_stage, Bl...	DSP48A1	Connectivity	open	unassig...	
		module_has_blackbox_in...		Module has blackbox instance. Instance Post_add_su...	DSP48A1	Connectivity	open	unassig...	
		module_has_blackbox_in...		Module has blackbox instance. Instance CYO_stage, ...	DSP48A1	Connectivity	open	unassig...	
		module_has_blackbox_in...		Module has blackbox instance. Instance PREG_stage...	DSP48A1	Connectivity	open	unassig...	
		multi_ports_in_single_line		Multiple ports are declared in one line. Module DSP48...	DSP48A1	Rtl Design Style	open	unassig...	3.5.6.3